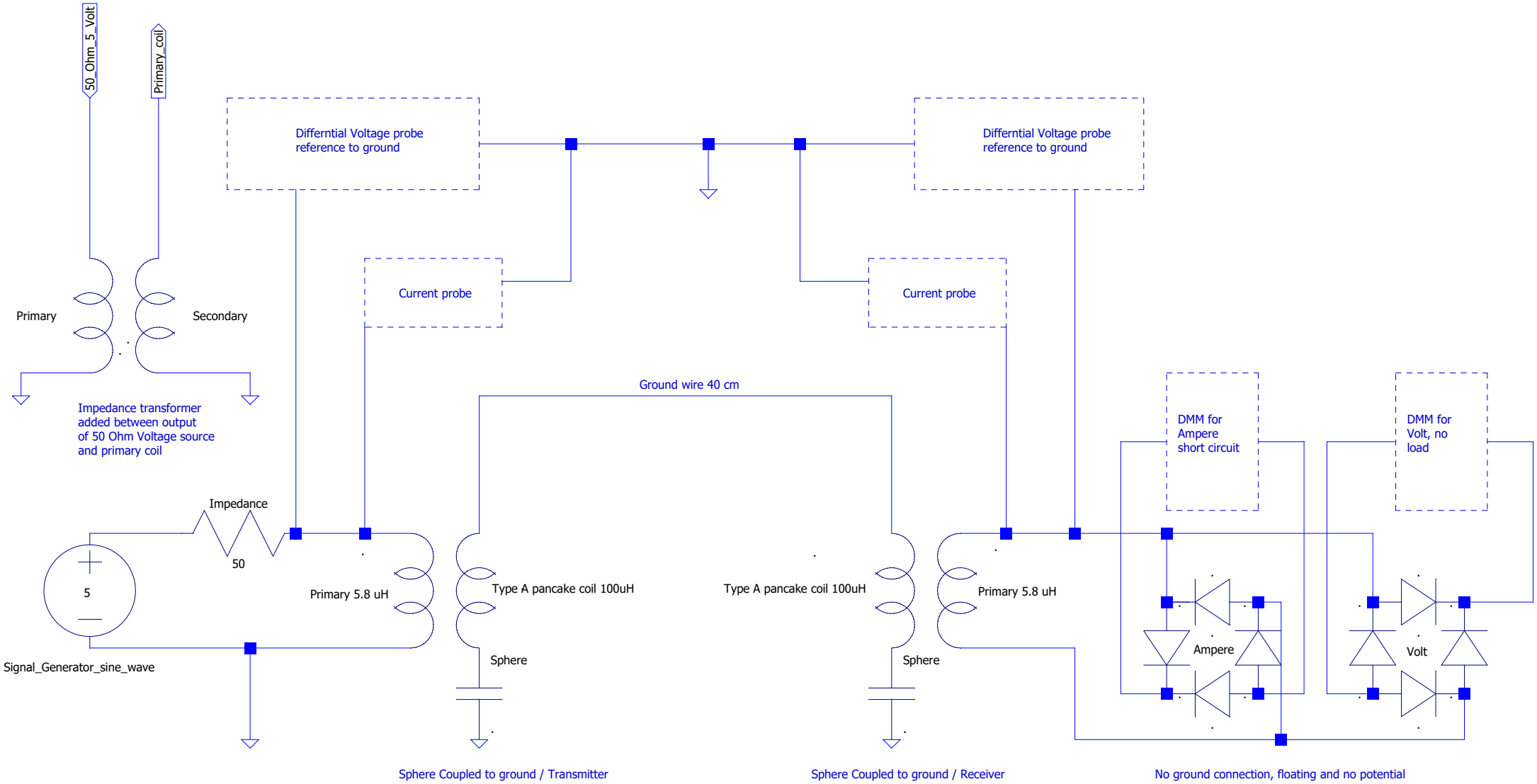Measurement of the Scalar network